Double Action Press

Slide parallelism is maintained by exceptional precise guiding system. INGYU cupping production line ensures steady BDC repeatability and part accuracy at maximum output.

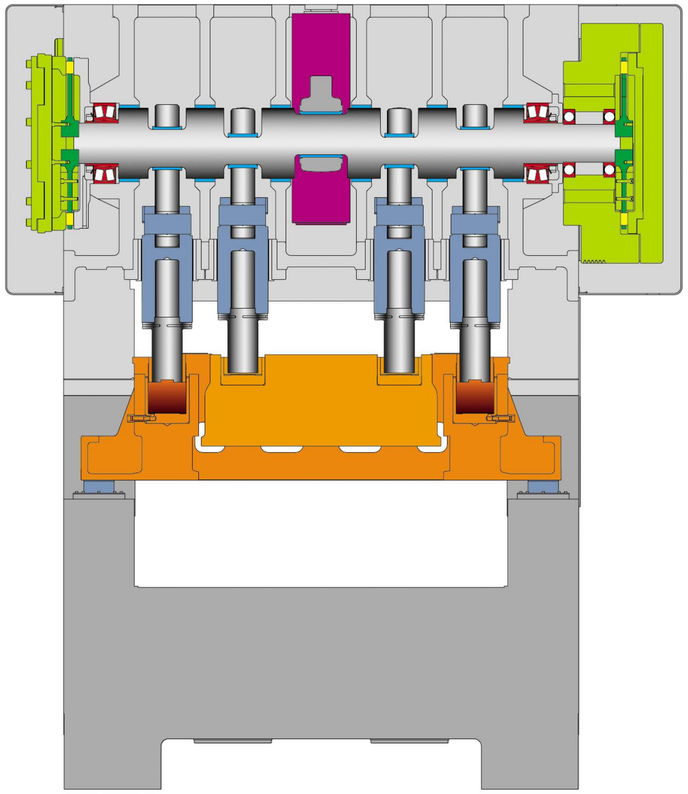

Feature

- 8 points crank supporting
- 6 hydro-dynamic bushings
- Dynamic balancer
- Cooling system
- Post guiding system
- Separated clutch & brake
- Slide quick lift for outer slide

Specification

Model		DDH-100	DDH-160
Capacity	ton	100	160
Phase shift	degree	60	60
Max speed	spm	300	250
Inner stroke	mm	125	125
Outer stroke	mm	50	50
Bed area	mm	1450 x 1100	2150 x 1300

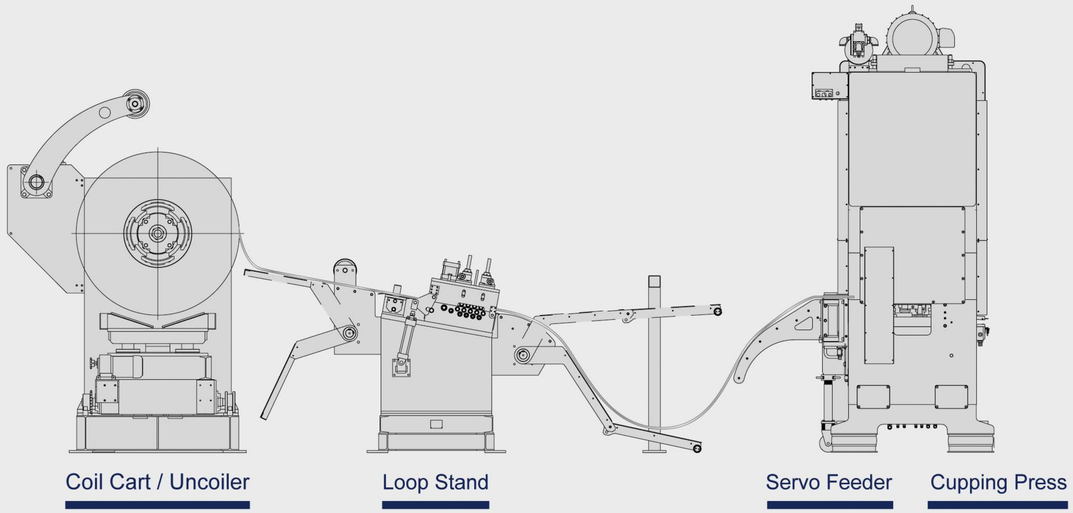
Coil Cart / Uncoiler
Loop Stand
Servo Feeder
Cupping Press

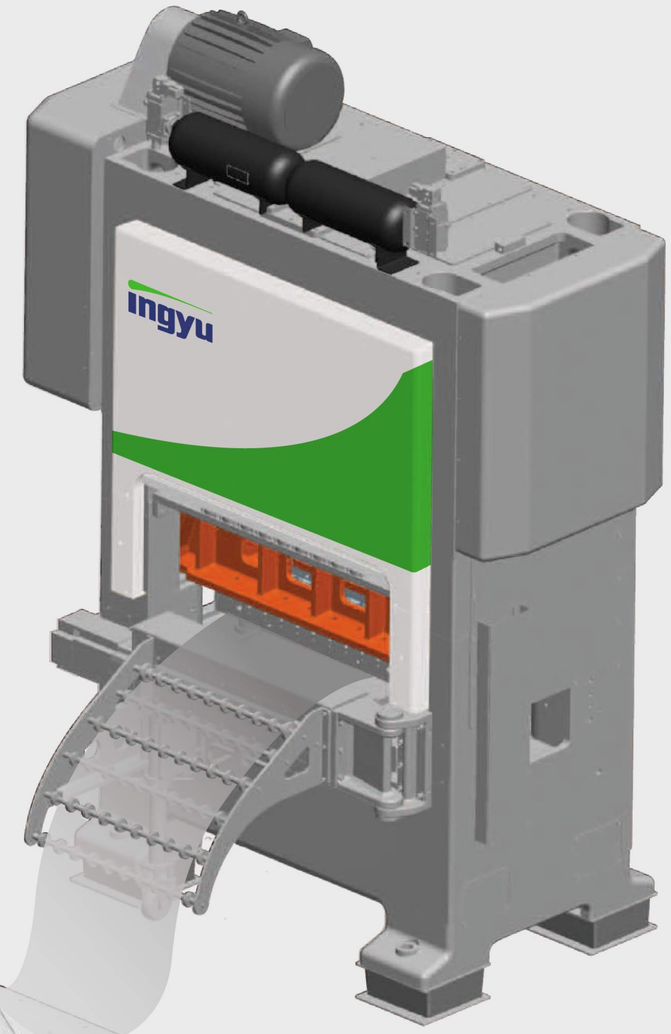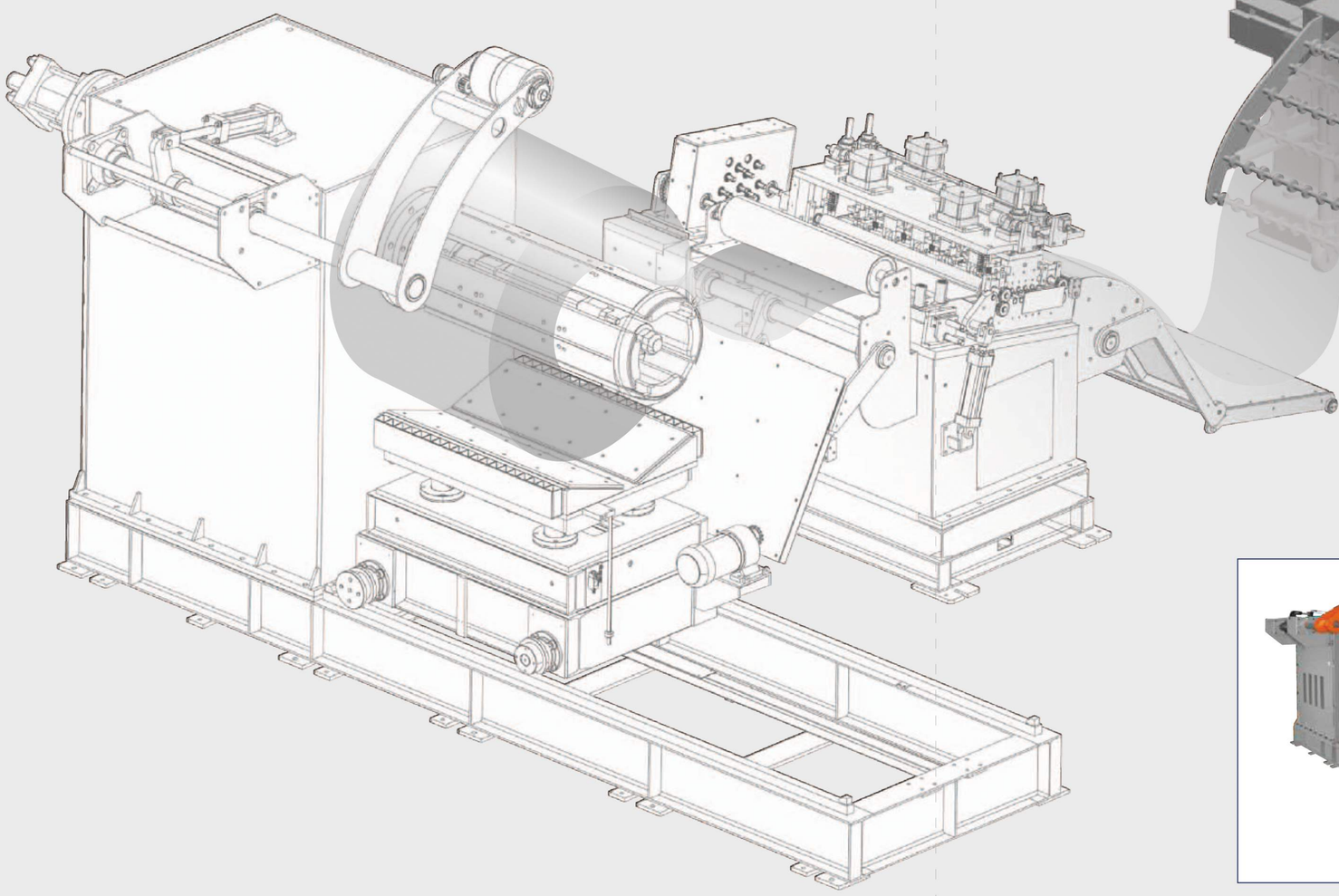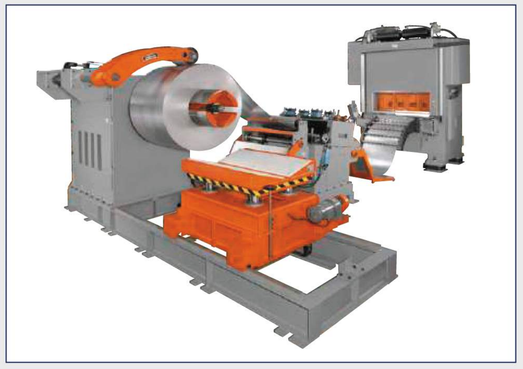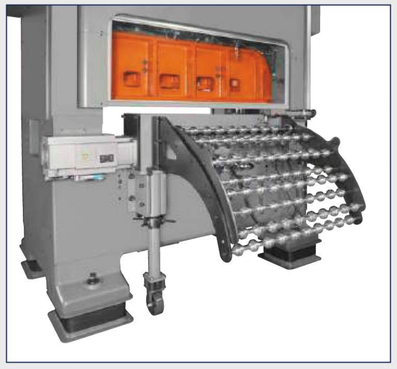
ingyu